ТРОТОАРЕН СПИРАТЕЛЕН КРАН

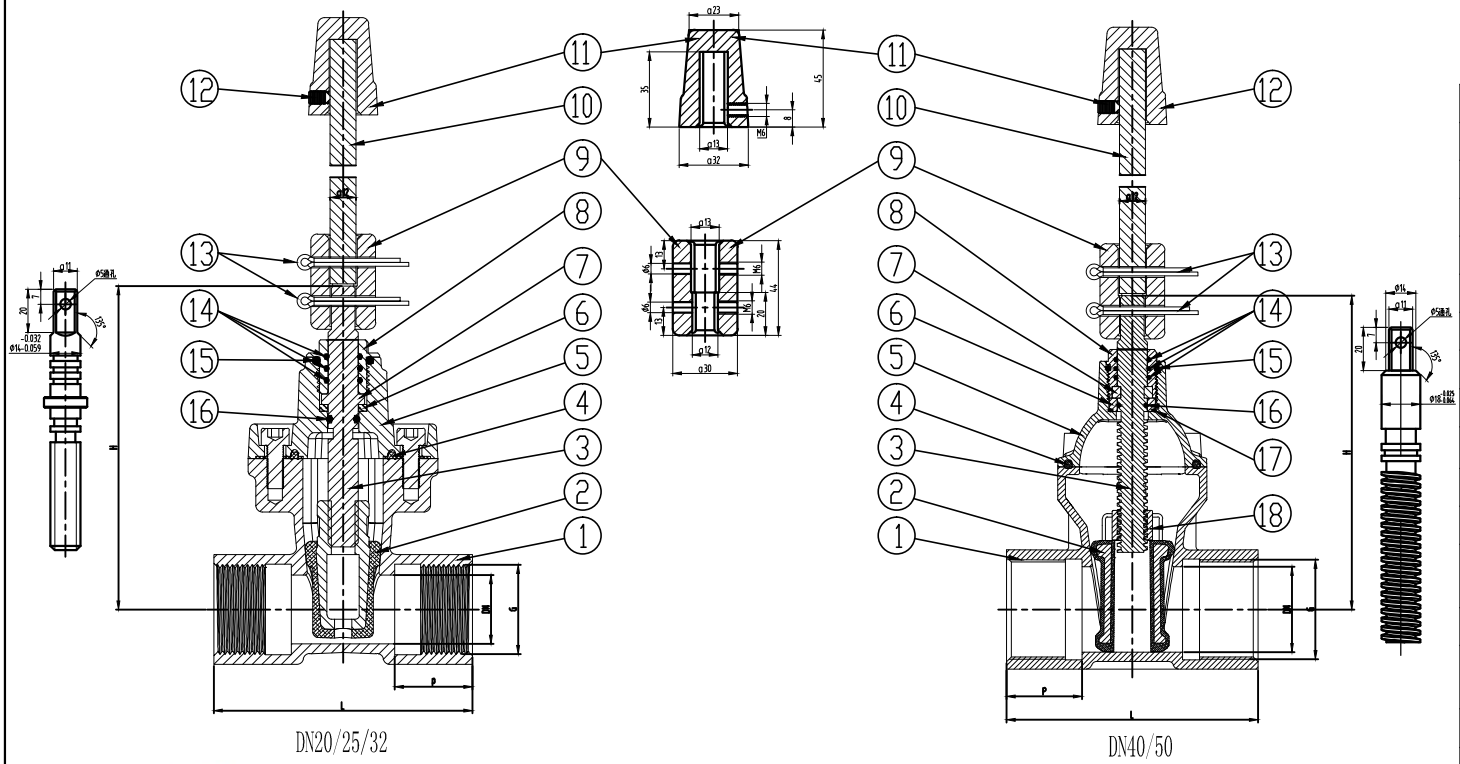

ITEM	PART NAME	MATERIAL
18	Stem Nut	CuZn39Pb1
17	O Ring	NBR
16	O Ring	NBR
15	O Ring	NBR
14	O Ring	NBR
13	Split pins	SS420
12	Mortarboard2	GGG50
11	Bolt	C45
10	Square tube	SS420
9	Mortarboard1	GGG50
8	Thrust Nut	CuZn39Pb1
7	Thrust	CuZn39Pb1
6	Thrust Washer	CuZn39Pb1
5	Bonnet	GGG50
4	Bonnet Gasket	NBR
3	Stem	SS420
2	Disc	DN20/25/32(EPDM+CuZn39Pb1) DN40/50(EPDM+GGG50)
1	Body	GGG50

DN	L	H	BSPP	P	Torque
20	95	150	3/4″	27	15N.m
25	105	150	1″	30	15N.m
32	120	150	1 1/4″	36	15N.m
40	130	145	1 1/2″	37	30N.m
50	150	145	2″	45	30N.m

Assembly drawing	IVALVE TECH. (TONGLING) CO.,LTD.
TOLERANCE LEVELS TO ISO SUBJECT TO CHANGE WITHOUT PRIOR NOTICE	Service valve
	BSPP female threaded